DocuSign Envelope ID: 500C771F-A1C9-4C5C-AB6D-7305A04E6377

6/2/99

PAVEMENT SCHEDULE (FINAL PAVEMENT DESIGN)	
C1	3.0″ S9.5B
D1	4.0″ I19.0C
J2	6″ ABC
J3	8″ ABC
R1	2′-6″ C&G
R4	8″ X 12″ C&G
R5	EXPRESSWAY GUTTER
S	4″ SIDEWALK
T	EARTH MATERIAL
U	EXISTING PAVEMENT
V	MILLING
W	WEDGING

NOTE: PAVEMENT EDGE SLOPES ARE 1:1 UNLESS SHOWN OTHERWISE.

CALYX ENGINEERS + CONSULTANTS

PROJECT REFERENCE NO.	SHEET NO.
U-5105	2A-2

PAVEMENT DESIGN ENGINEER: NORTH CAROLINA PROFESSIONAL ENGINEER SEAL 39779 JEREMY R. HAMM — Signature: Jeremy R. Hamm — 2/22/2018

ROADWAY DESIGN ENGINEER: NORTH CAROLINA PROFESSIONAL ENGINEER SEAL 15759 STEPHEN C. BRONDE — Signature: Stephen C. Bronde — 2/22/2018

DOCUMENT NOT CONSIDERED FINAL UNLESS ALL SIGNATURES COMPLETED

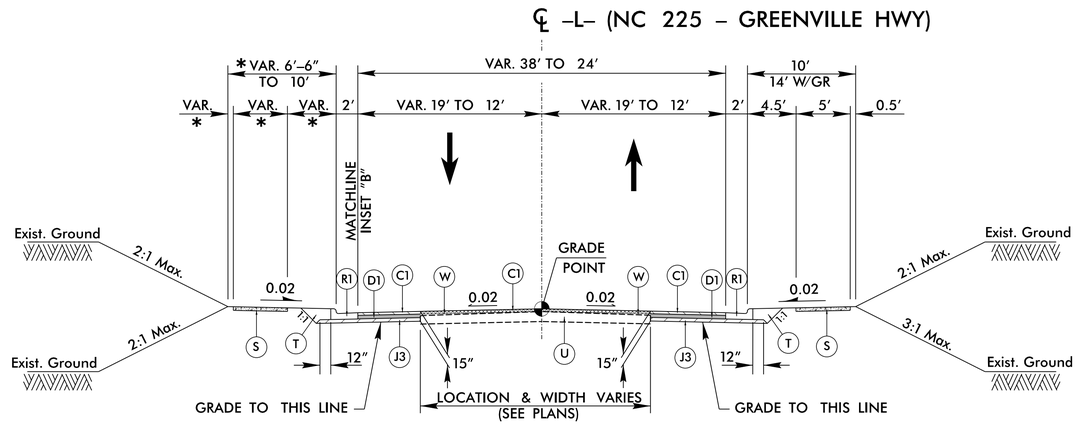

TYPICAL SECTION No. 3

USE TYPICAL SECTION NO. 3 AS FOLLOWS:

–L– STA. 21+50.00 TO 25+55.00

NOTE:

*SIDEWALK LOCATION & BERM WIDTH VARIES. SEE PLANS AND X–SECTIONS. SEE INSET 'B'

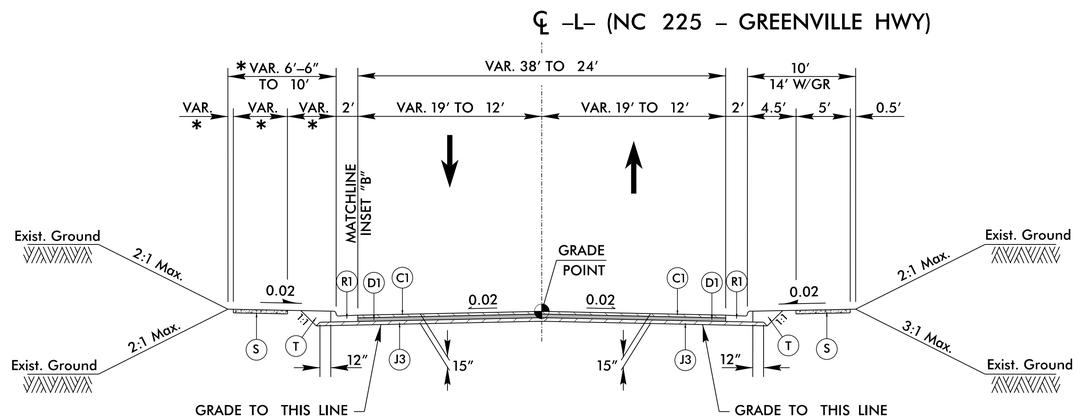

TYPICAL SECTION No. 4

USE TYPICAL SECTION NO. 4 AS FOLLOWS:

–L– STA. 20+00.00 TO 20+03.31

–L– STA. 21+23.33 TO 21+50.00

NOTE:

*SIDEWALK LOCATION & BERM WIDTH VARIES. SEE PLANS AND X–SECTIONS. SEE INSET 'B'

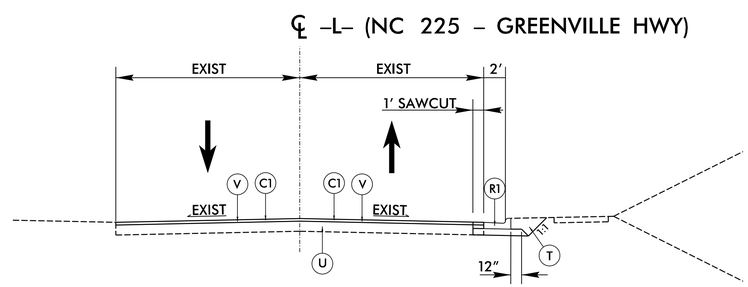

TYPICAL SECTION No. 5

USE TYPICAL SECTION NO. 5 AS FOLLOWS:

–L– STA. 24+90.00 TO 25+55.00

NOTE:

EXISTING SIDEWALK TO BE RETAINED.

2/21/2018
R:\Roadway\Proj\U5105_rdy_typ.dgn
ecallihan